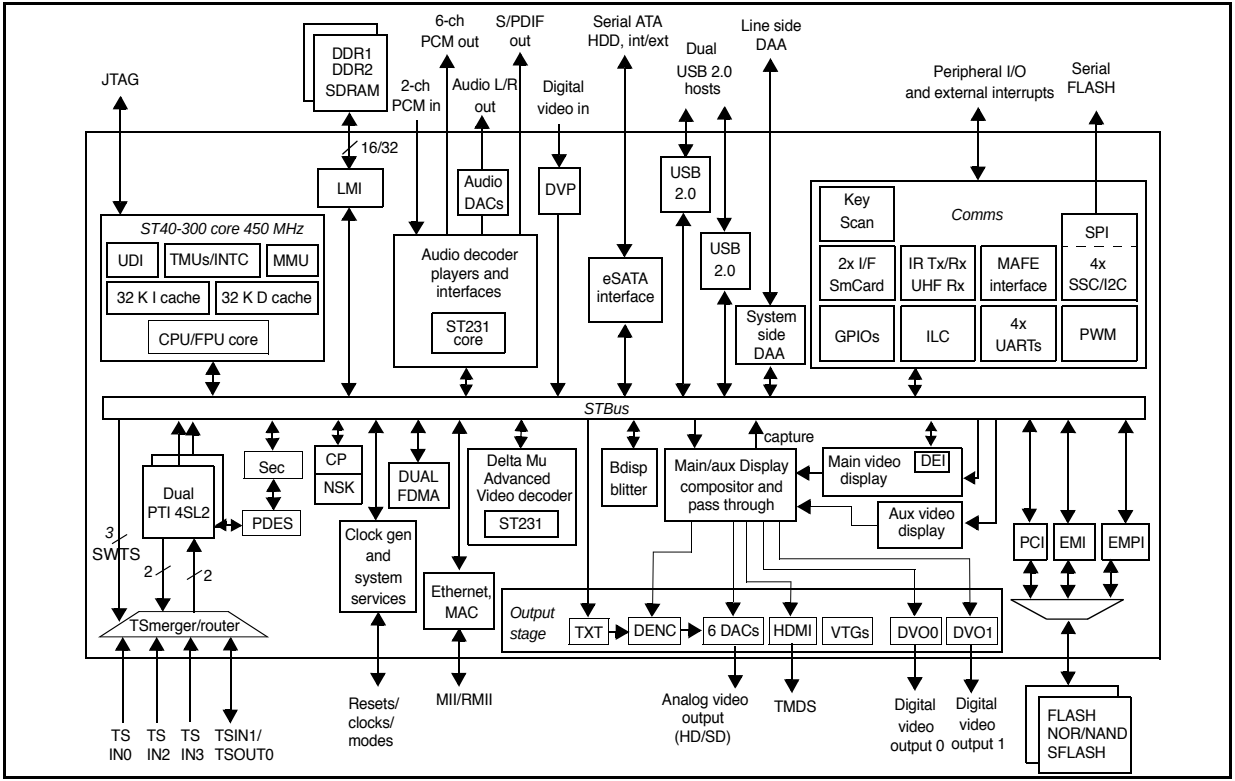
JTAG
DDR1
DDR2
SDRAM
6-ch
PCM out
S/PDIF
out
Serial ATA
HDD, int/ext
Dual
USB 2.0
hosts
Line side
DAA
Peripheral I/O
and external interrupts
Serial
FLASH
2-ch
PCM in
Audio L/R
out
Digital
video in
16/32
LMI
Audio
DACs
DVP
USB
2.0
USB
2.0
ST40-300 core 450 MHz
UDI
TMUs/INTC
MMU
32 K I cache
32 K D cache
CPU/FPU core
Audio decoder
players and
interfaces
ST231
core
eSATA
interface
System
side
DAA
Key
Scan
Comms
SPI
2x I/F
SmCard
IR Tx/Rx
UHF Rx
MAFE
interface
4x
SSC/I2C
GPIOs
ILC
4x
UARTs
PWM
STBus
Dual
PTI 4SL2
Sec
PDES
CP
NSK
DUAL
FDMA
Delta Mu
Advanced
Video decoder
ST231
Bdisp
blitter
capture
Main/aux Display
compositor and
pass through
Main video
display
DEI
Aux video
display
PCI
EMI
EMPI
3
SWTS
2
2
Clock gen
and
system
services
Ethernet,
MAC
Output
stage
TXT
DENC
6 DACs
HDMI
VTGs
DVO0
DVO1
TSmerger/router
TS
IN0
TS
IN2
TS
IN3
TSIN1/
TSOUT0
Resets/
clocks/
modes
MII/RMII
Analog video
output
(HD/SD)
TMDS
Digital
video
output 0
Digital
video
output 1
FLASH
NOR/NAND
SFLASH